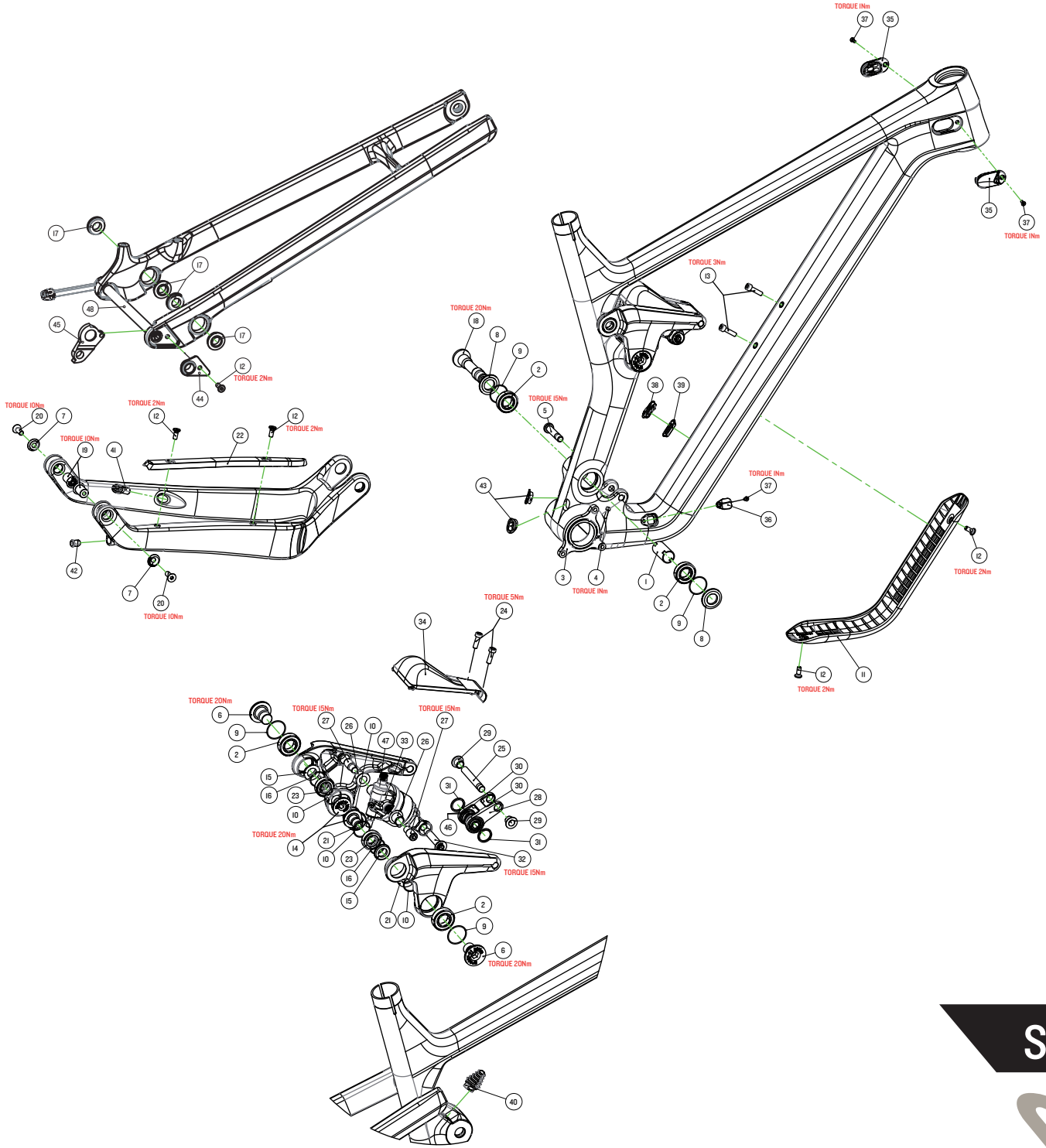

After market products			
EP/GP#	POS.NR.	QTY.	CANYON#
GP0182-01	2, 17, 23, 26	4x 4x 2x 2x	10002542
GP0183-01	25 (EP0866-01), 26, 27 (EP0885-01), 28 (EP0886-01), 29, 30, 31	1x 2x 2x 1x 2x 2x 2x	10002543
GP0184-01	9, 10, 16	4x 4x 2x	10002544
GP0185-01	5 (EP0859-01), 6 (EP0857-01), 8 (EP0856-01), 14 (EP0864-01), 15 (EP0865-01, 21 (EP1117-01)	1x 2x 2x 2x 2x 2x	10002545
GP0094-01	3 (EP0777-01), 4	1x 1x	168942
GP0171-01	45 (EP0786-01), 12	1x 1x	10002366
GP0172-01	45 (EP0787-01), 12	1x 1x	10002367
EP0860-01	11	1x	10002547
EP0887-01	32	1x	10002560
GP0416-01	48	1x	10002758
	26	2x	10000047

STRIVE CF | M065-01

REVISION 00 | 19.05.2021

THIS TECHNICAL DOCUMENT, INCLUDING ANY PICTURES AND VIDEOS PROVIDED, IS COPYRIGHT-PROTECTED AND INTENDED SOLELY FOR USE IN YOUR OPERATION BY DULY AUTHORIZED PERSONNEL