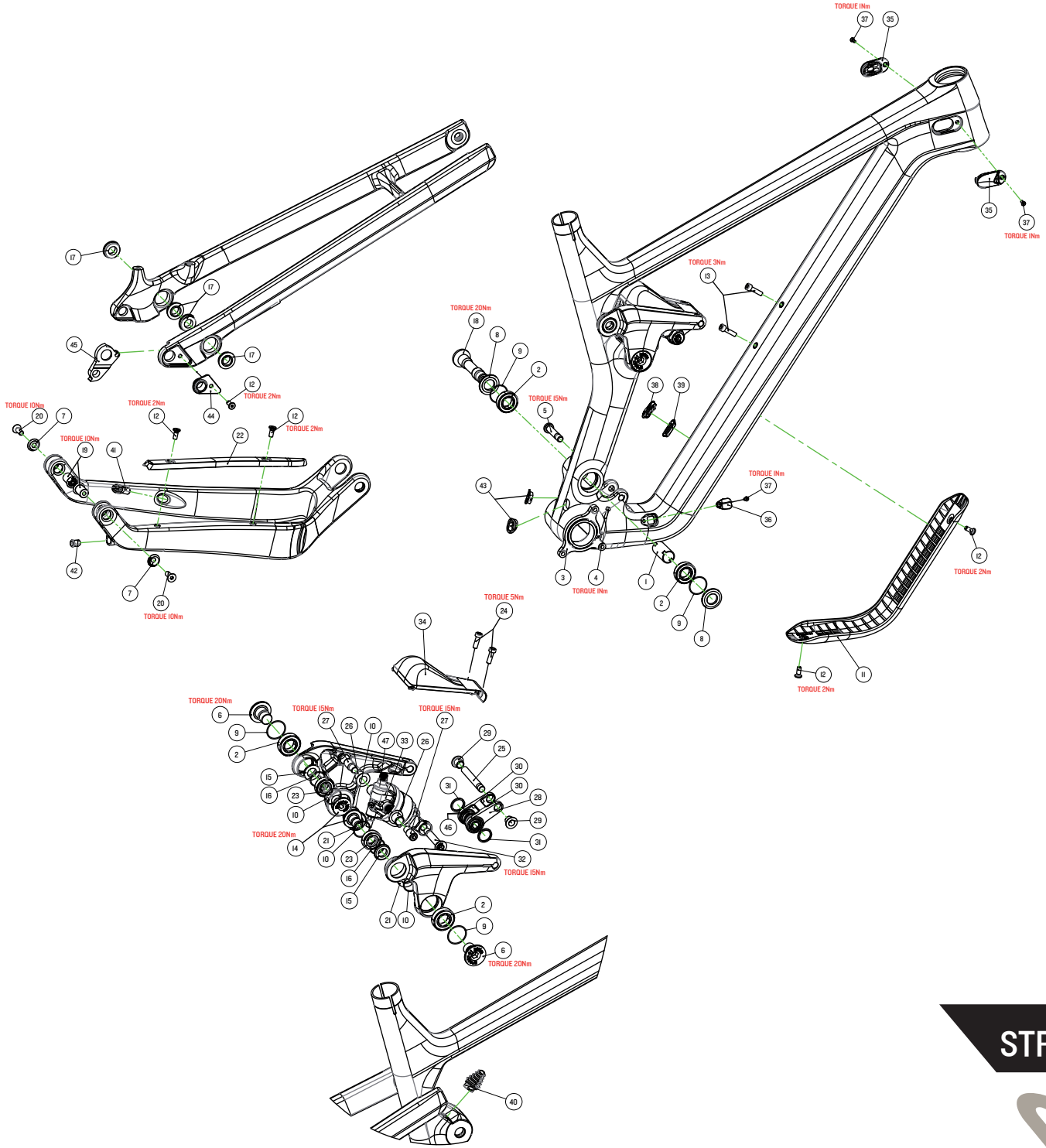

After market products				
EP/GP#	POS.NR.	QTY.	DESPRIPTION	CANYON#
GP0182-01	2, 17, 23, 26	4x 4x 2x 2x	Bearing Kit	10002542
GP0183-01	24, 25 (EP0866-01), 26, 27 (EP0885-01), 28 (EP0886-01), 29, 30, 31	2x 1x 2x 2x 1x 2x 2x 2x	Mounting Kit SS	10002543
GP0184-01	9, 10, 16	4x 4x 2x	O-Ring Kit	10002544
GP0185-01	5 (EP0859-01), 6 (EP0857-01), 8 (EP0856-01), 14 (EP0864-01), 15 (EP0865-01, 21 (EP1117-01)	1x 2x 2x 2x 2x 2x	Bolt Kit	10002545
GP0094-01	3 (EP0777-01), 4	1x 1x	ISCG Plate AM	168942
GP0171-01	45 (EP0786-01), 12	1x 1x	RD-Hanger Kit Sram	10002366
GP0172-01	45 (EP0787-01), 12	1x 1x	RD-Hanger Kit Shimano	10002367
EP0855-01	1	1x	Main pivot bushing	10002546
EP0860-01	11	1x	DT protector	10002547
EP0866-01	25	1x	H-Link axle	10002557
EP0868-01	18	1x	Main pivot axle	10002549
EP0869-01	43	1x	BB cable guide	10002548
EP0884-01	19	2x	Horstlink axle	10002550
EP0885-01	27	2x	SS rocker screw	10002558
EP0886-01	28	1x	H-Link	10002559
EP0887-01	32	1x	Upper shockmount bolt	10002560

STRIVE CF / STRIVE CFR | M065-01 / M066-01

REVISION 01 | 07.03.2019

CANYON