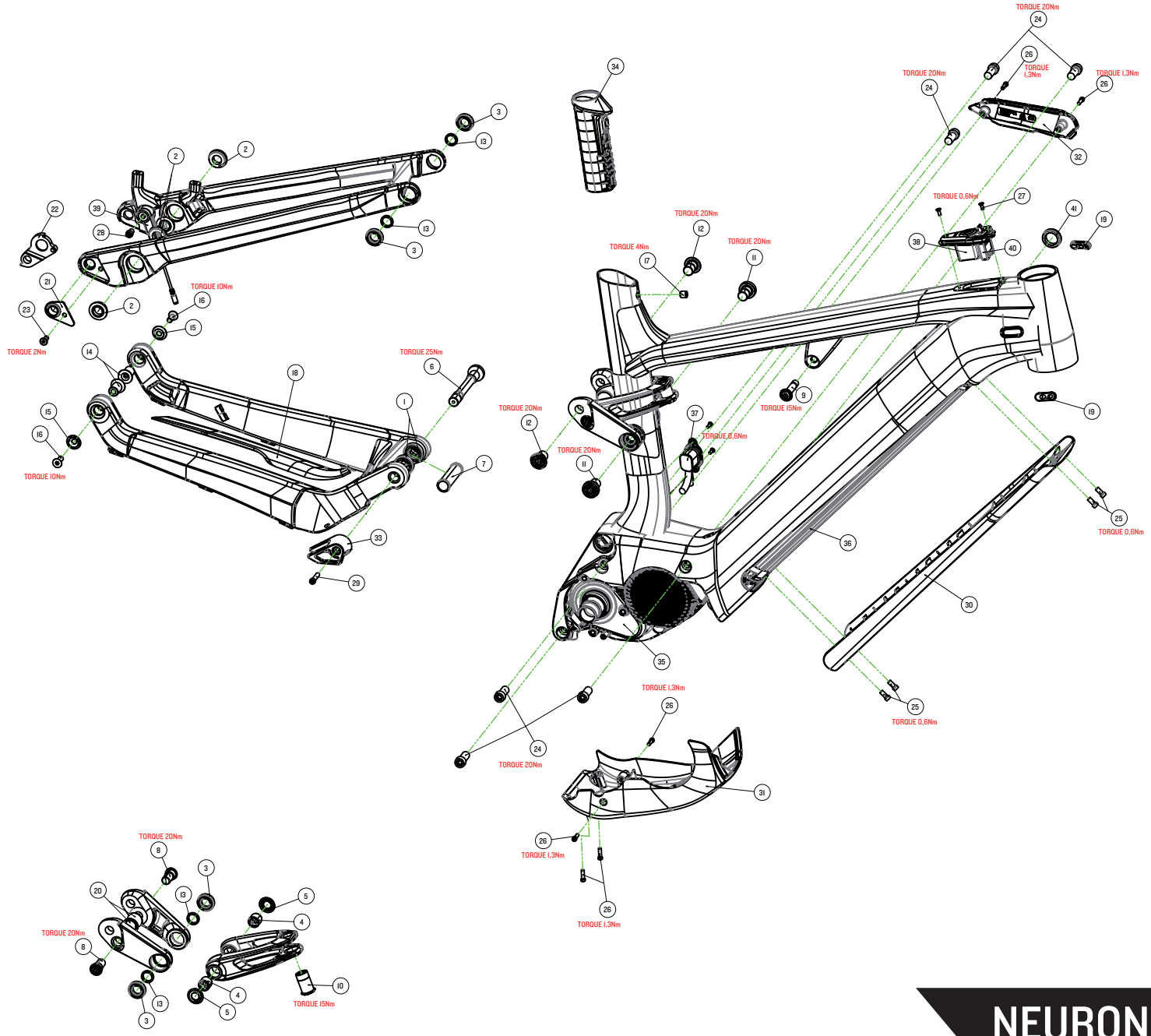

After market products				
EP/GP#	POS.NR.	QTY.	DESPRIPTION	CANYON#
GP0155-01	22 (EP0786-01), 23	1x 1x	RD-Hanger Kit Sram	10001125
GP0156-01	22 (EP0787-01), 23	1x 1x	RD-Hanger Kit Shimano	10001126
GP7096-01	14 (EP0633-01), 15 (EP0634-01), 16	2x 2x 2x	MTG KIT HL M123 AM	10007508
GP7074-01	8 (EP1256-01), 9 (EP0742-01), 10 (EP0758-01), 11 (EP0997-01), 12 EP0998-01), 13 (EP0757-01), 20 (EP1006-01)	2x 1x 1x 2x 2x 4x 1x	MTG-Kit R-Pivot M126 AM	10007900
GP7076-01	6 (EP0995-01), 7 (EP0996-01)	1x 1x	MP Bolt w/Spacer M126 AM	10007902
GP7077-01	26, 31 (EP1308-02)	4x 1x	Motor Cover w/s M126 AM	10007903
GP7078-01	29, 33 (EP1001-01)	1x 1x	Chain Device w/s M126 AM	10007904
GP7079-01	1, 2, 3, 4	2x 4x 4x 2x	Bearing Kit AM	10007506
GP7115-01 P02	25, 30 (EP1307-02)	4x 1x	Battery Cover Set M126 AM	10007919
GP7117-01 P04	25, 30 (EP1307-02)	4x 1x	Battery Cover Set M126 AM	10007920
GP7118-01 P05	25, 30 (EP1307-02)	4x 1x	Battery Cover Set M126 AM	10007921
GP7140-01 P01 | P03	25, 30 (EP1307-02)	4x 1x	Battery Cover Set M126 AM	10008047
GP7153-01 M125 P05 M126 P06	25, 30 (EP1307-02)	4x 1x	Battery Cover Set M126 AM	10008057
	37	1x	ELPA SHIM EW-CP100 Charging Port 200 AM	10008408
GP0225-01	info	1x	TA 148x12x1.0 bk AM	10011906

NEURON:ON | M126-01

REVISION 01 | 06.11.2023

THIS TECHNICAL DOCUMENT, INCLUDING ANY PICTURES AND VIDEOS PROVIDED, IS COPYRIGHT-PROTECTED AND INTENDED SOLELY FOR USE IN YOUR OPERATION BY DULY AUTHORIZED PERSONNEL