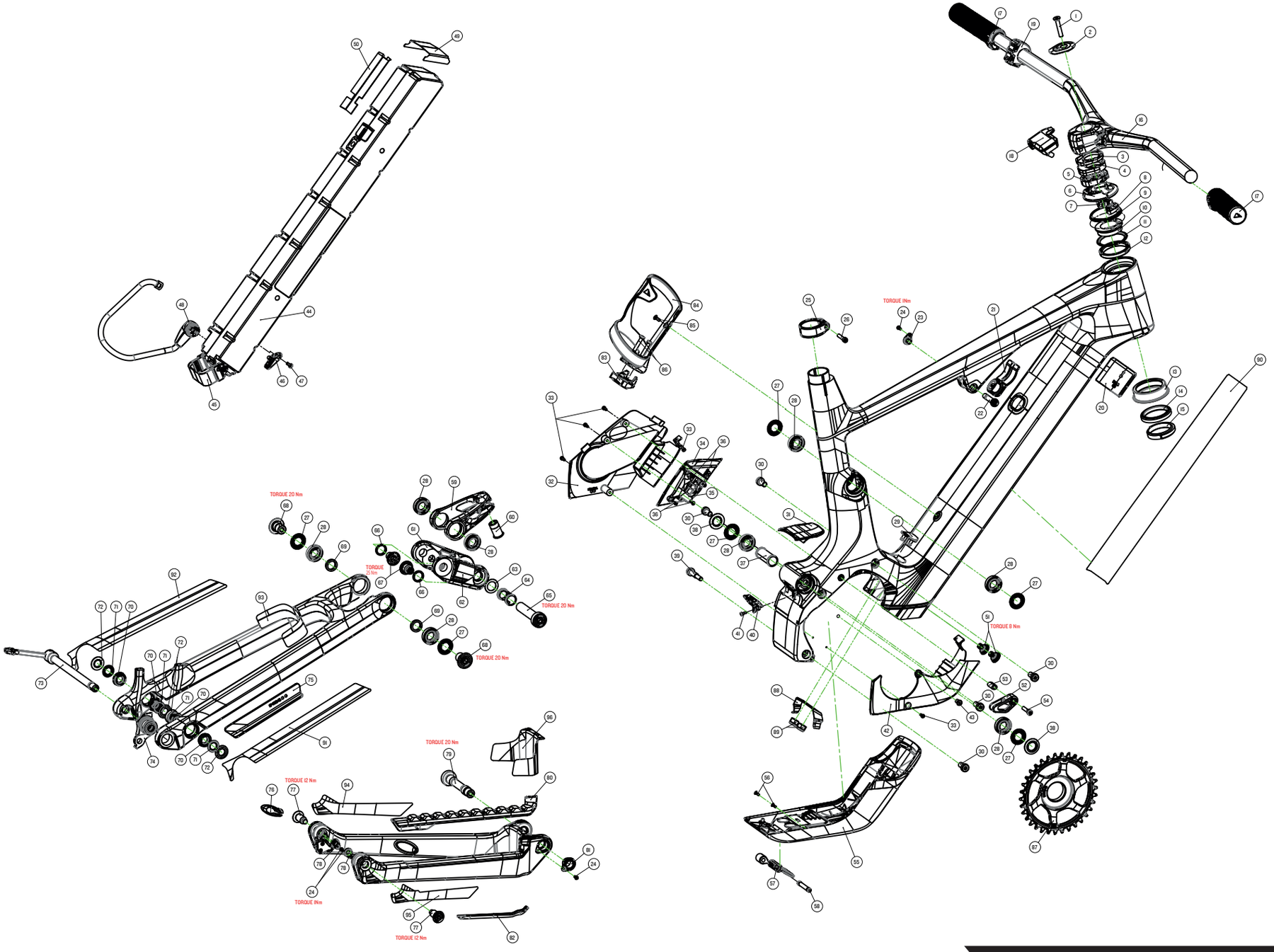

After market products			
EP/GP#	POS.NR.	QTY.	CANYON#
GP7208-01	24, 37 (EP1394-01), 79 (EP1392-01), 81 (EP1186-01)	1x 1x 1x 1x	10008985
GP7208-02	24, 37 (EP1394-02), 38 (EP1174-01), 79 (EP1392-01), 81 (EP1186-01)	1x 1x 2x 1x 1x	10009987
GP7211-01	40 (EP1409-01), 41, 76 (EP1545-01), 88 (EP1556-01), 89	1x 1x 1x 1x 2x	10009982
GP7204-01	33, 42 (EP1406-01), 43 (EP1568-01)	1x 1x 1x	10008989
GP7205-01	33, 32 (EP1407-01),	4x 1x	10008990
GP7206-01	22 (EP1176-01), 23 (EP1364-01), 24, 60 (EP0758-03)	1x 1x 1x 1x	10008983
GP7207-01	63 (EP1432-01), 64 (EP1395-01), 65 (EP1391-01), 66 (EP1397-01, 67 (EP1128-01), 68 (EP1393-01), 69 (EP1396-01)	2x 1x 1x 2x 2x 2x 2x	10008984
GP7212-01	20 (EP1419-01), 31 (EP1701-01), 75 (EP1401-01), 80 (EP1399-02), 82 (EP1400-02)	1x 1x 1x 1x 1x	10008997
GP7213-01	21 (GP0278-01)	1x	10008998
GP7217-01	51 (EP1405-01)	2x	10008986
EP1110-01	87	1x	10008979
	74	1x	10006305
GP7038-01	27 (61902), 28 (6902V 2RS)	2x 2x	10007487
GP7040-01	70 (F6801V 2RS), 71 (61801)	2x 2x	10007489
GP7042-01	1, 2 (EP1118-01), 3 (EP0674-01), 4 (EP0675-01)	1x 1x 2x 1x	10007491
GP0350-01	34, 35, 36	1x	10008681
GP7252-01	40 (EP1409-01), 41	1x 1x	10010445

SPECTRAL:ON CF | M129-01

REVISION 00 | 13.04.2022

THIS TECHNICAL DOCUMENT, INCLUDING ANY PICTURES AND VIDEOS PROVIDED, IS COPYRIGHT-PROTECTED AND INTENDED SOLELY FOR USE IN YOUR OPERATION BY DULY AUTHORIZED PERSONNEL